Comparing Bactericidal Effect of Pulsed Flash Lamp and Continuous Sterilization UV Lamps with a Cold Atmospheric Pressure Plasma Jet on E. Coli Solid Growth Medium

Farshad Sohbatzadeh[1], Mojgan Barzegar[1,*], and Abasalt Hosseinzadeh Colagar[2]

[1]Department of Atomic and Molecular Physics, Faculty of Science, University of Mazandaran, Babolsar, Iran
[2]Department of Molecular and Cell Biology, Faculty of Science, University of Mazandaran, Babolsar, Iran

***Corresponding author Email:** barzegar.mojgan68@gmail.com

Regular paper: Received: Jan. 19, 2021, Revised: Mar. 13, 2022, Accepted: Mar. 14, 2022, Available Online: Mar. 16, 2022, DOI: 10.52547/ijop.15.2.209

ABSTRACT— Pulsed UV sterilizer lamps and cold atmospheric pressure plasma are the newest technologies that have been proposed as feasible alternatives in the traditional sterilization method. The main objective of this project was to compare the sterilization effect of these two technologies (Pulsed UV lamps and cold atmospheric pressure plasma) with continuous UV lamps on *Escherichia coli* bacteria. Although Continuous UV lamps are widely used in different organizations such as hospitals for sterilization, they take hours to sterilize the medium. There are methods that can effectively decay the bacteria surface in a few minutes; it is called cold atmospheric plasma jet. Since sterilization has gained lots of attention, many researches are performing by other methods. This project releases how atmospheric plasma can strongly influence better on decaying *Escherichia coli* bacteria compared to two other techniques; Xenon arc lamp, continuous UV lamp. The results suggested that the xenon pulsed flash lamps with Pyrex envelope have the ability to sterilize the surface of the bacterium with at least 80 pulses. The results of atmospheric plasma flow on the bacterial surface have been proved that the reactive species (OH radicals, charged particles, NO, ozone, O_3, in the plasma jet caused a significant decline in the colony numbers; after 6 minutes treatment by plasma jet, there was a great reduction in the number of colonies up to zero. Also, the effect of the commercial continuous UV sterilizer lamp was used and its sterilization results were compared to pulsed flash lamps and cold atmospheric plasma. These results demonstrate that pulsed light treatment can be effective on destroying *Escherichia coli* bacteria due to its high energy and short operating time.

KEYWORDS: Cold Atmospheric Pressure Plasma, Continuous Ultraviolet Lamp, Escherichia coli, Flash Pulse, Sterilization.

I. INTRODUCTION

Bactericidal treatment by means of ultraviolet (UV) radiation is an ecologically safe, economical, and convenient method that results in highly efficiency disinfection free of harmful effects on water and air [1]-[2].

Plasma processing stands out among new decontamination technologies, since it offers rapid sterilization against bacteria"s such as *E. coli*. This decontamination method helps protecting materials from harmful effects of microorganism. The first experiment in this field was performed in 1996 on the effect of plasma on bacterial destruction [3]. Unlike most disinfectants, UV radiation does not inactivate microorganisms by chemical interactions, inactivates them by absorbing light by itself, which leads to a photochemical reaction. The radiation penetrates the cell wall

[Downloaded from ijop.ir on 2026-11-23]

of microorganisms, affecting nucleic acids and other vital cellular materials. Then, cells that are exposed to UV radiation decreased progressively (damaged or destroyed); in fact, the cell loses its reproduction. The inactivation rate of microorganisms was proportional to the intensity and duration exposure of the ultraviolet radiation. In [4]-[5], a research has been done on the effect of ultraviolet pulses on bacteria, which demonstrates the effectiveness of ultraviolet pulses. However, there is not a comparison between continuous lamp and plasma and also pulsed flash lamps.

Physical plasma can be generated by adding energy (heat or electromagnetic fields) to a neutral gas until the ionized gaseous substance becomes increasingly electrically conductive. Plasmas emit electromagnetic radiation, predominately UV radiation and visible light, and contain excited gas molecules, positively and negatively charged ions, free electrons, neutral reactive oxygen/nitrogen species (ROS/RNS), free radicals, and molecule fragments [6]. Due to its distinct characteristics compared to ordinary neutral gases, plasma is considered as a fourth state of matter (besides solid, fluid, and gaseous). In modern medicine, high-temperature plasmas are used, e.g., for sterilization of medical devices [7]-[15].

In medical and biological fields, sterilization is one of the most important issues because contaminated instruments may put the practice in jeopardy, cause fatal infection for human, or produce incorrect experimental results. Hence, many sterilization tools such as thermal sterilization, chemical solutions, and ultra-violet (UV) irradiation were developed and used. Yet, most of the conventional sterilization tools involve some level of damage to the medium sustaining microorganisms and show relatively low efficiencies. Especially, some chemicals widely used for the sterilization induce serious damages to the user or the environment [15]. For these reasons, the plasma as a means of the sterilization has been recently emerged with a great expectation for the cold sterilization without inducing any harmful effects to the environment and personnel [7].

UV sterilization is not a new technology, having been discovered before, but becoming more pronounced in the 20th century. UV radiation at specific wavelength (UVC) was most effective in killing or inactivating the *E. coli* cells and preventing it from proliferation of microorganisms through a physical process. One requirement of this UV mechanism is the need to adjust the percentile components of UVC, UVB and UVA emitted by the pulse source to suit specific sterilization conditions. Disinfection with Flash Lamps allows the conclusion that the pulsed disinfection mechanism includes both germicidal action of UVC light and a rupture of bacteria due to thermal stress, caused primarily by all UV components of the light pulse [16]. In some environments, such as hospitals and healthcare centers, since the importance of sterilization time was attracted, high-power flash lamps were recommended compared to other traditional methods; as continuous UV lamps.

Figure 1 indicates a view of home-made pulsed light driver. Flash lamps are filled with a rare gas and the ignition of the system is not obvious. At first, flash lamps behave before ionization like very low capacitances (between 100 and 500 pF). An intense external electromagnetic source must be applied on the lamp to provoke the gas dielectric breakdown: the filling gas has, in the non-ionized state, very great impedance (several tens of MΩ). The application of a high voltage source (several kilovolts) must result on the gas breakdown and a spark streamer is generated between both electrodes. The ionized lamp is now a low impedance system. The initiation phases of the discharge formation are complex and are strongly dependent upon the immediate environment of the lamp (presence of the wire, the cooling water nature may even have its own importance on the starting conditions). The most influent factor on the starting conditions is the presence of the silica.

In the first moments, a spark is generated between one of the electrodes and the inside wall in proximity. The propagation runs all along the envelope up to the formation of a ionized channel linking the electrodes. The

[Downloaded from ijop.ir on 2026-11-23]

trigger pulse creates initial gas ionization between electrodes [17]. The electrical energy is accumulated in the pulse-forming network (PFN), and then the energy is released in the form of fairly square pulse.



Fig. 1. A view of home-made pulsed light driver

The performance of such powerful pulse driver is mentioned below: In the process of each pulse, the energy is stored inside the capacitor. The discharge of the stored energy into the Xenon flash lamp is initiated by a high-voltage trigger pulse generated by a pulse generator and a step up transformer. The trigger pulse applied to a wire wrapped around the tube envelope creates an ionized streamer between the electrodes. Subsequently, the lamp will be turned on [17]. Figure 2 illustrates a block diagram of pulsed light driver with trigger part. In other words, the diagram mentioned below shows every single unit in charging the capacitor and turning on the flash lamp.

Pulsed flash lamps and Cold atmospheric plasma jets are the latest and emerging technologies, which have attracted the attention of scientist in biotechnology and industrial applications.

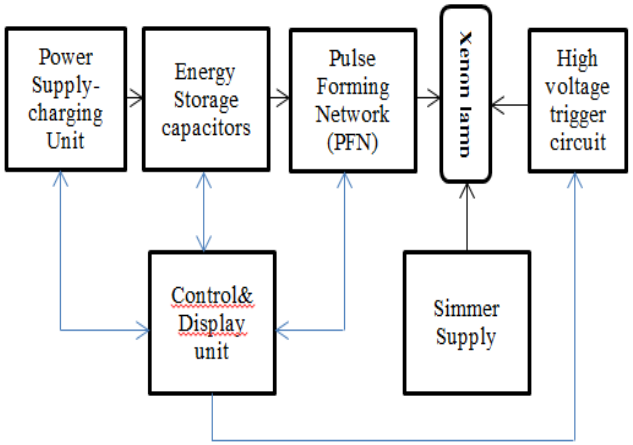

Fig. 2. Block diagram of the pulsed light driver together with the trigger

Pulsed light (PL) is a technique to decontaminate surfaces by killing microorganisms using pulses of an intense broad spectrum, rich in UV-C light [4]. The technique of disinfection with flash lamps originated during late 1970's in Japan and was patented in 1984 [18]. Disinfection data suggests that both the pulsed UVC line radiation and perhaps visible radiation are responsible for the disinfection effect [16]. Continuous and pulsed ultraviolet radiations are being used in research labs around the world including United States, Germany, Russia, Japan, Iran and Canada for sterilization [6].

The aim of this study was comparing the efficiency of 30-watt 220-volt continuous sterilization UV lamps without fluorescence coating (Germicidal lamp) and 400J xenon pulsed flash lamp and cold argon-oxygen plasma [19] used for sterilization and also elimination of the *Escherichia coli* in solid media. Also, results have shown that the effectiveness of the pulses on microorganisms depends directly on the amount of energy that the sample receives per second from the lamp (W/M^2), the amount of energy that the sample receives from the lamp during treatment (J/M^2), duration exposure of each pulse and the number of pulses [20].

[Downloaded from ijop.ir on 2026-11-23]

II. MATERIALS AND METHODS

A. *Jet Plasma Set-up*

Non-thermal single argon-oxygen plasma jet (99% argon and 1% air; gas flow of one litter per minute) was produced by high sinusoidal voltage at 18.56 kHz, which was used previously in [19]. The main structure of the device consists of a cylindrical electrode connected to an alternating high voltage source (AC power source). Following the entry of argon gas through the capsule and the application of the appropriate voltage, a fourth state of matter or plasma was formed, which was released from the nozzle in the form of a jet [19]. The plasma jet was 27 mm length. The optical emission spectroscopy (OES) technique was applied for recognizing plasma species. Figure 4(A) illustrates the species spectrum range of Argon plasma jet.

B. *Mechanisms of Pulse Radiation Disinfection*

UV radiation in the bactericidal range of 205–315 nm always produces a bactericidal action, which is characterized by UV photon absorption by DNA molecules inside the cell and the disintegration and formation of bonds. As a result, a microorganism loses its reproduction ability. The curve of the efficiency of the bactericidal action of UV radiation with regard to wavelengths agrees well with the absorption curve of UV radiation by DNA molecules [1], [2], [21].

C. *Advantages of Sterilization Systems with Intense Pulsed UV Light*

Studies have shown that sterilization systems with intense pulsed UV light feature the following advantages [21]:

- sterilization in a fraction of a second,
- one or a few pulses deliver up to 6 logs reduction for most of micro-organisms,
- sterilization with UVB part of spectra through most of clear packages (which is not possible with standard 254 nm mercury based lamps),
- a high UV output in full UV spectrum,
- an adjustment of flash lamp spectra to fit it´s major output into a specific UV band (UVC: 200-280 nm, UVB: 280-315 nm, or UVA: 315-400 nm),
- a low Infrared (IR, or heat) part of lamp spectra (above 700 nm),
- instant on/off of lamps,
- the environmental safety (no mercury in lamps),
- a deep UV penetration in purification and surface treatment processes,

D. *Description of Pulsed Ultraviolet Device (Arc Flash Lamp)*

Four hundred joule xenon pulsed flash lamp were used for decontamination of the samples. Pulsed light is achieved by high-intense light pulses of short durations. The operation of arc-xenon lamp is as following: electrical energy is stored in a capacitor. A high-voltage pulse (20kV) triggers the Xenon lamp, and then, the main voltage 700volts discharges between anode and cathode and ionizes the gas inside the tube, initiates the plasma arc between two electrodes of the xenon flash lamp. The xenon lamp produces a continuous spectrum from the ultraviolet to the near-infrared. S100 spectrometer (Solar100 spectrometer) was applied in this experiment for UV spectroscopy.

The spectral characteristics of UV sterilizer lamps (continuous UV lamps) and flash lamps at different sterilization exposure times are shown in Fig. 3. Spectral characteristic of continuous sterilization has been shown in Fig. 3. Flash lamp exposing to lighting for 600 milliseconds and 1 second are respectively shown in Figs. 3(B) and 3(A). Two polarizers are placed perpendicularly to each other during recording time of flashlight”s spectroscopy for 1 second. Also, an optical fiber is tilted to omit direct viewpoint. While, for measuring flash lamp”s emission at 0.6 seconds (Fig. 3(B)) there is no polarization. (Just fiber angle was adjusted). The spectroscopy results show that the line with the sign (*) in Fig. 3(A) is related to the element mercury with wavelength 249.95nm, which has the greatest role in sterilization with a sterilizer lamp (continuous UV lamp) [6].

[Downloaded from ijop.ir on 2026-11-23]

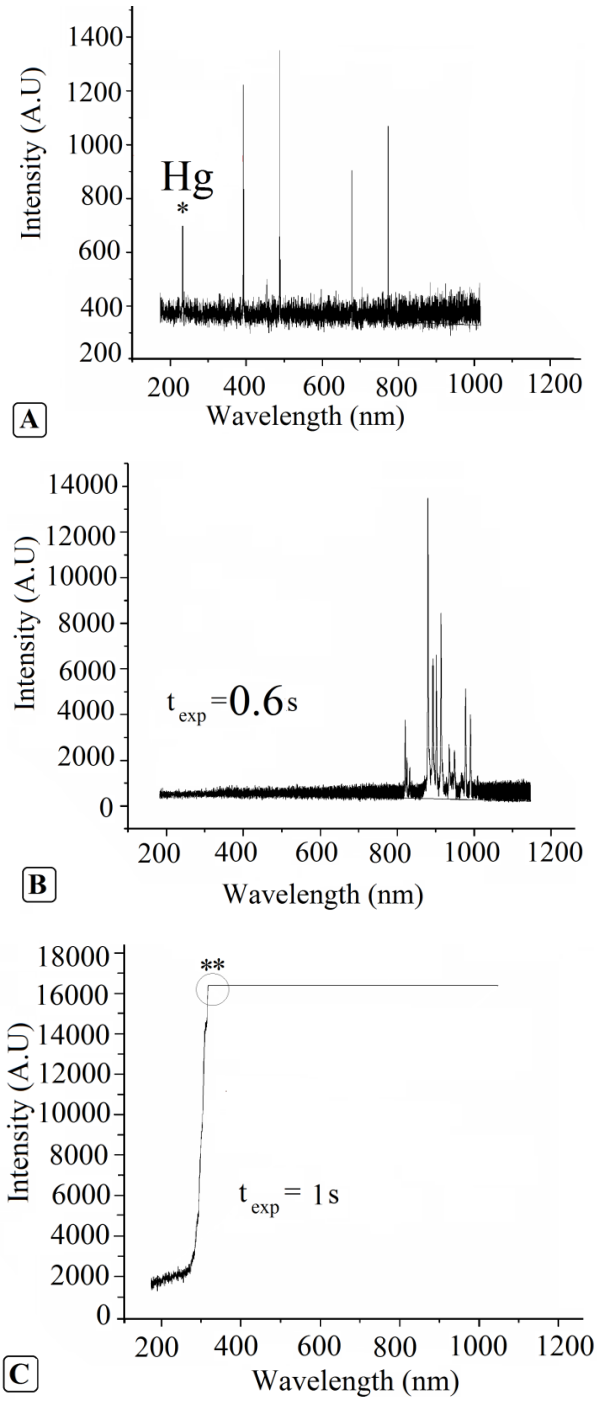

Fig. 3. Spectral irradiance in various UV exposure times A) UV lamp spectral radiance output measurement B), spectroscopy of flash lamp at exposure time 0.6sec C) spectroscopy of flash lamp at exposure time 1 second. (**The UV Cutoff of Pyrex coating).

Figure 4(A) represents the optical emission spectra of argon plasma at 27 mm from the jet nozzle. This spectral irradiance was carried out to investigate species" spectral intensities versus wavelength. Many different atomic and molecular electronic transitions occur in the plasma. Reactive oxygen species due to its oxidizing properties, hydroxyl radicals, and reactive nitrogen species as inactivating agents influence severely on Bacteria.

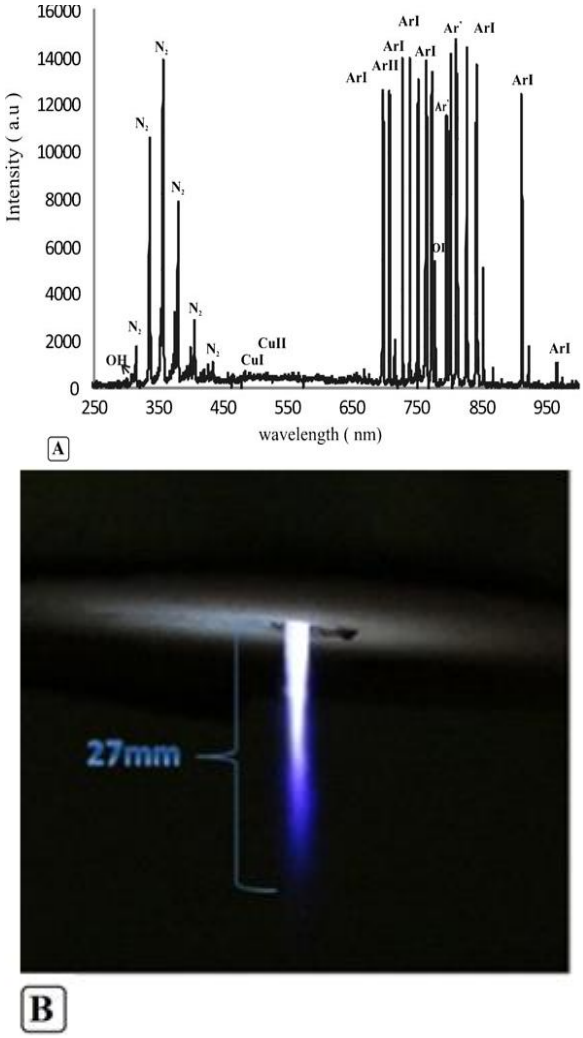

Fig. 4. A) Spectral irradiance of Argon plasma jet detected by optical emission spectroscopy (OES) technique. The spectra were recorded 27 mm below the tip of the jet nozzle. B) A view of the plasma jet.

The profile proves that Reactive oxygen and nitrogen species, argon metastable atoms (Ar^*) have significant impact on the bacteria membrane. Bombardment of E. coli by ions and electrons generated in the plasma jet causes etching effect on the cell surface, and cell material is eroded. As a result, the cell membrane ruptures, and the contents effuse [15]. Changes in the integrity of the membrane can directly affect DNA, particularly in bacteria where DNA is anchored to the membrane [22]. Moreover, reactive oxygen species (ROS) affect bacterial membrane lipids by causing the formation of unsaturated fatty acid peroxides.

[Downloaded from ijop.ir on 2026-11-23]

In biological membrane systems, lipid peroxidation generates products that often react with DNA and proteins leading to oxidative modifications [23]-[24].

Peroxidation of phospholipid bilayer is known to cause cellular death through a chain process leading to the formation of DNA adducts. The process of lipid peroxidation results in the formation of MDA. MDA is one of the main products of membrane lipid peroxidation. MDA levels increased with increasing plasma exposure durations regarding to our findings. Our results suggest that lipid peroxidation and MDA may also play an important role in inactivation of bacteria and in sublethal cellular effects.

The lipid peroxidation chain reaction is initiated by the attack of unsaturated fatty acid by ROS (or any reactive species) that abstracts H atom from a methylene group (−CH2). This reaction leads to formation of a fatty acid radical (L•). It can readily react with an oxygen molecule to give a lipid peroxyl radical (LOO•). These radicals can abstract H atoms from other lipid molecules to become LOOH. LOO• is unstable and breaks down to form various products such as aldehydes (malondialdehyde and 4-hydroxy-nonenal) [25]-[27].

To assess the spectroscopy of arc flash lamp, increasing exposure time to 1 second was done so that all peaks were saturated, which is not acceptable spectroscopy. We reduced the exposure time to 0.6 seconds and recorded good spectra, then. Although there is a great reduction in radiation intensity by Pyrex coating, results in figure C displays that flash lamp radiation at wavelengths below 300 nm is significantly noticeable. Therefore, radiation range of flash lamp at the wavelength between 200 to 300 nm can be effective in bactericidal process, where bacterial DNA bonds are most absorbed. By absorbing ultraviolet radiation in this range, the DNA of the bacterium is destroyed and the bacterium will not be able to survive [28]-[33].

III. Microorganism Preparation and Culture Medium

A. *Microorganism Preparation*

In this experiment, lyophilized samples of *Escherichia coli* (Escherichia coli ATCC 35218) were purchased from Iran Pasteur Institute. Luria Bertani (LB) medium is a rich medium used for culturing bacteria. 1 ml of liquid LB medium was added to the bacterial stock and incubated for 16 hours at 37°C. After preparing pure and fresh culture from bacterial storage, 0.5 ml of this LB was inoculated into solid LB medium and then grown 24h at 37°C. After this step, one bacterial loop was inoculated into 15 ml LB of fresh liquid and placed in a shaker incubator at 37°C for 12 hours. Then, 1 ml of the grown LB medium was inoculated again into 15 ml of fresh liquid LB in Falcon and placed in a shaker incubator at 37°C until the turbidity of the LB medium reach OD600nm=0.25 equal to 3×10^8 CFU /ml.

B. *Bactericidal Effect in Solid Culture Medium*

Ten microliters of *E. coli* suspension corresponding to 50,000 cells was poured on a slide measuring 602×4.25, which was previously sterilized at an oven temperature 225°C for two hours. Finally a thin uniform spread was prepared. A thin uniform spread was dried and then treated with UV. After irradiation of UV light, either pulsed (70 and 80 pulses in 5 minutes) or continuous UV (for 2 and 4 hours) and plasma flow (at 3 and 6 minutes), the bacteria on the slide Sterile was collected with 50 µl of sterile LB by swap and then inoculated uniformly on LB solid culture medium by the previous method and cultured uniformly. The inoculated plates were incubated for 37 hours at 37°C by the previous method.

C. *Results and Discussion, Comparison 1*

The bactericidal effect of xenon pulsed flash lamp and atmospheric cold plasma on 3×10^8 CFU Escherichia coli inoculated into solid culture medium with a thickness of 4 mm are compared.

[Downloaded from ijop.ir on 2026-11-23]

Results showed that the petri dish treatment of *Escherichia coli* with 3×10^8 CFU inoculated into a solid culture medium with a thickness of 4 mm by a sterile continuous commercial UV lamp had no effect on reducing the number of colonies. We performed the same experiment on petri dishes with the number of 3×10^8 CFU bacteria by a 70-pulse pulsed flash lamp in 5 minutes. The results showed that there was no significant effect on reducing bacterial growth. (Fig. 4: A1-A3). In order to compare the sterilization effect of xenon and continuous ultraviolet lamps with the effect of cold argon-air plasma jet, we repeated the treatment process with the same initial number. The results showed that plasma flow reduced the number of bacteria grown compared to the control by 21.65% (Fig. 4: C2) in 90 seconds and by 61.15% (Fig. 4: C3) in 300 seconds. Figure 4 shows that cold argon-air plasma jets are much more effective at sterilizing solid surfaces compared to xenon and continuous UV incandescent lamps.

D. *Comparison 2*

The Bactericidal Effect of Xenon Lamp and Sterile Lamp with Cold Atmospheric Plasma on Escherichia Coli Inoculated into 3×10^8 CFU Culture Medium are compared.

In another study to evaluate the effectiveness of all three methods, we reduced the number of primary bacterial colonies to 1×10^8 CFU so that all three methods could kill the bacteria from the solid culture medium. The results showed that plasma at 3 min flow reduced the number of bacteria grown compared to the control by 87.5% (Fig. 5: B3) and 6 minutes by 100% (Fig. 5: B4), i.e., the plasma was able to completely sterilize It has the initial concentration of bacteria. However, under the same conditions of treatment and the same number of bacteria with xenon pulsed lamp in 5 minutes with 70 pulses, the number of colonies decreases by 37.5% (Fig. 5: B1) and in 6 minutes with 80 pulses by 62.5% (Fig. 5 B2) Therefore, it can be concluded that the sterilization power of argon-air plasma jet is higher compared to xenon pulsed lamp in the same time. Also, in the treatment with an uncovered continuous UV lamp for 2 hours or more, the number of bacteria grown reaches zero, which is said to have been sterilized. (Fig. 5: C1 and C2).

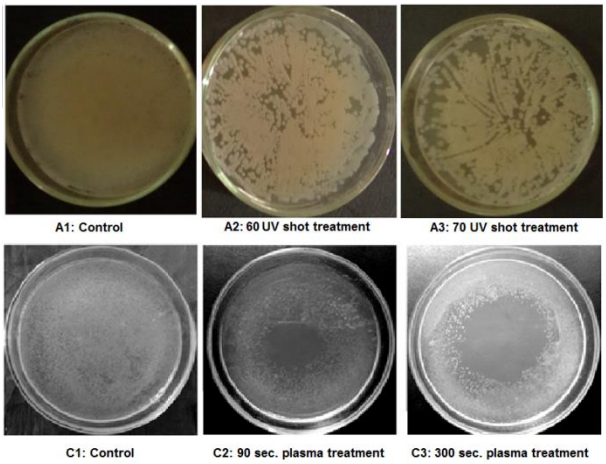

Fig. 4. A comparison of the effect of xenon pulsed flash lamp, uncoated continuous UV lamp with atmospheric plasma jet: bactericidal effect of xenon pulsed flash lamp on 3×10^8 bacteria, control sample (A1), treated with 60 pulses (A2), treatment With 70 pulses (A3); bactericidal effect of Plasma on 3×10^8 bacteria, control sample (C1), 90 seconds (C2), 300 seconds plasma treatment (C3),

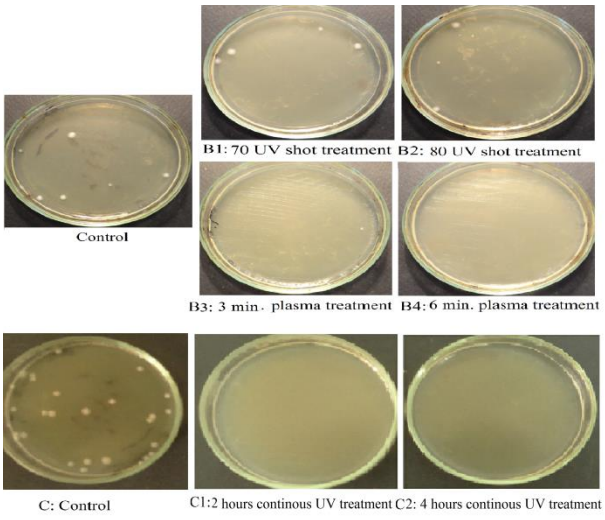

Fig. 5. A comparison of the effects of xenon pulsed flash lamp with argon-air plasma jet: bactericidal effect of xenon pulsed flash lamp on 1×10^8 bacteria, treated with 70 pulses (B1), treated with 80 pulses (B2); Bactericidal effect of argon-air plasma jet on 1×10^8 bacteria, treated 3 minutes by atmospheric plasma jet (B3), treated 6 minutes by atmospheric plasma jet (B4); Bactericidal effect of uncovered continuous UV lamp on 1×10^8 bacteria, control sample (C), treated 2 hours by UV radiation (C1); Treated 4 hours by UV radiation (C2)

The effect of sterile and flash lamps on argon-cold plasma jets and cold plasma jets in killing

[Downloaded from ijop.ir on 2026-11-23]

Escherichia coli was investigated. By applying pulses of flash and plasma flux to the bacteria, we came to the conclusion that after plasma jet, flash-pulse can be considered as a new technology in sterilization. Therefore, instead of spending a few hours sterile with continuous UV lamps, we can achieve a sterile surface similar to a continuous lamp with a flash lamp in a few minutes, or use plasma technology.

IV. CONCLUSION

Despite UV radiation has been used as a disinfectant for decades, powerful methods like pulsed flash lamps and atmospheric plasma jet can strongly influence on *E. coli* solid growth medium which can be replace traditional method; called continuous UV sterilization lamps. According to the results, there was a great decline in the number of colonies. The comparison between these three methods indicates that plasma as well as pulsed flash lamp performs much better than continuous sterilization UV lamp. Plasma treatment decreases the number of colonies in 6 minutes, which shows a wonderful feature of plasma. Also pulsed lamp plummets the colonies number up to zero in 70 pulses. To sum up, these two methods are strongly efficient and economical on destroying *E. coli* solid growth medium. This study has proven that non-thermal plasma generates species like electrons and ions, hydroxyl radicals, ozone that directly destroys the bacteria cell. In other words, these reactive species such as ozone, NO, OH radicals, charged particles electrons and ions affect bacteria cell in a short time. Plasma jet decrease sterilization time, which is important in science world. To sum up, *E. coli* was inactivated in a short time when exposed to plasma and 400 joule pulsed xenon lamp. The bacteria was inactivated by continuous UV lamp. It should be noted that there isn't any temperature changes on the surface of the samples.

REFERENCES

[1] P. Roger, *Sources and applications of Ultraviolet Radiation*, Academic Press, London, 1983.

[2] Yu. B. Aizenberg Ed, *Spravochnaya kniga po svetotekhnike*, Moscow: Znak, 2006.

[3] P. Kong, "Atmospheric Pressure Plasma Process and Applications". In Sohn International Symposium; Sep. 2006 Advanced Processing of Metals and Materials Volume 6: New, Improved and Existing Technologies: Aqueous and Electrochemical Processing, IEEE Photonic Technology Letter, Vol. 6, pp. 493-506.

[4] Y.M.K. Sharifi and H. Dargahi. "Inactivation of pathogenic bacteria using pulsed UV-light and its application in water disinfection and quality control," Acta Medica Iranica, Vol. 44, pp. 305-308, 2006.

[5] A. Wekhof, F.J. Trompeter, and O. Franken, "Pulsed UV disintegration (PUVD): a new sterilisation mechanism for packaging and broad medical-hospital applications". In The first International Conference on Ultraviolet Technologies, p. 15, 2001.

[6] L.M. Vasilyak, "Application of pulsed electrical discharge lamps for bactericidal treatment". Surface Eng. Appl. Electrochem. Vol. 45, pp. 26-34, 2009.

[7] T. Gerling and K.D. Weltmann, *Einfhrung in Atmosphrendruck-Plasmaquellen fur plasmamedizinische Anwendung*, Springer-Verlag, Berlin Heidelberg, Plasmamedizin, 2016. (book chapter).

[8] K.-D. Weltmann, M. Polak, K. Masur, T. Von Woedtke, J. Winter, and S. Reuter, "Plasma processes and plasma sources in medicine," Contributions Plasma Phys. Vol. 52, No. 7, pp. 644–654, 2012.

[9] K.-D. Weltmann, J. Winter, M. Polak, J. Ehlbeck, and T.V. Woedtke, *Atmospheric pressure plasmas for decontamination of complex medical devices, Plasma Bio-Decontamination, Medicine Food Security*, Springer, Dordrecht, pp. 3-15, 2012.

[10] G.E. Morfill and J.L. Zimmermann, "Plasma health care - old problems, new solutions," Contributions Plasma Phys. Vol. 52, No. 7, pp. 655–663, 2012.

[11] J. Ehlbeck, U. Schnabel, M. Polak, J. Winter, T. Von Woedtke, R. Brandenburg, T. Von dem Hagen, and K.D. Weltmann, "Low temperature atmospheric pressure plasma sources for microbial decontamination," J. Phys. D: Appl. Phys. Vol. 44, No. 1, pp. 013002 (1-34), 2011.

[12] T. Woedtke, A. Kramer, and K.-D. Weltmann, "Plasma sterilization: what are the conditions to meet this claim?" Plasma Processes Polymers, Vol. 5, No. 6, pp. 534–539, 2008.

[Downloaded from ijop.ir on 2026-11-23]

[13] M. Moreau, N. Orange, and M.G.J. Feuilloley, "Non-thermal plasma technologies: new tools for bio-decontamination," Biotechnol. Adv. Vol. 26, No. 6, pp. 610–617, 2008.

[14] M. Laroussi, "Low temperature plasma-based sterilization: overview and state-of-the-art," Plasma Processes Polymers, Vol. 2, No. 5, pp. 391–400, 2005.

[15] M. Moisan, J. Barbeau, S. Moreau, J. Pelletier, M. Tabrizian, and L.H. Yahia, "Low-temperature sterilization using gas plasmas: a review of the experiments and an analysis of the inactivation mechanisms," Int. J. Pharmaceutics, Vol. 226, No. 1-2, pp. 1–21, 2001.

[16] A. Wekhof, "Disinfection with flash lamps," PDA J. Pharmaceutical Science Technol. Vol. 54, pp. 264-276, 2000.

[17] T.P.A. Devasagayam, K.K. Boloor, and T. Ramasarma, "Methods for estimating lipid peroxidation: an analysis of merits and demerits,", Indian J. Biochem. Biophys. Vol. 40, pp. 300–308, 2003.

[18] A. Hiromoto, *Method of sterilization*, U.S. Patent 4464336, 1984.

[19] S.M. Mortazavi, A. Hosseinzadeh Colagara, and F. Sohbatzadeh, "The Efficiency of the Cold Argon-oxygen Plasma jet to reduce Escherichia coli and Streptococcus pyogenes from solid and liquid ambient," Iran J. Med. Microbiol. Vol. 10, pp. 19-30, 2016.

[20] V.M. Gomez-Lopez, P. Ragaert, J. Debevere, and F. Devlieghere, "Pulsed light for food decontamination: a review," Trends food Sci. Technol., Vol. 18, pp. 464-473, 2007.

[21] R.M. Oducado, M.K.Q. Amboy, A.C. Penuela, and R.G. Belo-Delariarte, "Correlation between theoretical classroom instruction and related learning experiences: Evidence from a Philippine nursing university," Int. J. Sci. Technol. Research, Vol. 8, pp. 3666-3670, 2019.

[22] L. Yang, J. Chen, and J. Gao, "Low temperature argon plasma sterilization effect on Pseudomonas aeruginosa and its mechanisms," J. Electrostatics, Vol. 67, pp. 646–651, 2009.

[23] M. Moreau, N. Orange, and M.G.L. Feuilloley, "Non-thermal plasma technologies: new tools for bio-decontamination", Biotechnology Adv. Vol. 26, pp. 610–617, 2008.

[24] H.P. Song, B. Kim, J.H. Choe, S. Jung, S.Y. Moon, W. Choe, and C. Jo, "Evaluation of atmospheric pressure plasma to improve the safety of sliced cheese and ham inoculated by 3-strain cocktail Listeria monocytogenes," Food Microbiology, Vol. 26, pp. 432–436, 2009.

[25] S.G. Joshi, M. Cooper, A. Yost, M. Paff, U.K. Ercan, G. Fridman, G. Friedman, A. Fridman, and A.D. Brooks, "Nonthermal dielectric-barrier discharge plasma-induced inactivation involves oxidative DNA damage and membrane lipid peroxidation in Escherichia coli," Antimicrobial Agents Chemotherapy, Vol. 55, pp. 1053–1062, 2011.

[26] L.F. Gaunt, C.B. Beggs, and G.E. Georghiou, "Bactericidal action of the reactive species produced by gas-discharge nonthermal plasma at atmospheric pressure: a review," IEEE Trans. Plasma Sci. Vol. 34, pp. 1257–1269, 2006.

[27] A. Hosseinzadeh Colagar, F. Sohbatzadeh, S. Mirzanejhad, and A. Valinataj Omran, "Sterilization of Streptococcus pyogenes by afterglow dielectric barrier discharge using O_2 and CO_2 working gases," Biochemical Eng. J. Vol. 51, pp. 189–193, 2010.

[28] M. Moisan, J. Barbeau, M.C. Crevier, J. Pelletier, N. Philip, and B. Saoudi, "Plasma sterilization. Methods and mechanisms," Pure Appl. Chem. Vol. 74, pp. 349-358, 2002.

[29] O. Kylian, M. Hasiwa, and F. Rossi, "Effect of low-pressure microwave discharges on pyrogen bioactivity", IEEE Trans. Plasma Sci. Vol. 34, pp. 2606-2610, 2006.

[30] M. Moisan, J. Barbeau, S. Moreau, J. Pelletier, M. Tabrizian, and L.H. Yahia, "Low-temperature sterilization using gas plasmas: a review of the experiments and an analysis of the inactivation mechanisms," Int. J. Pharm. Vol. 226, pp. 1-21, 2001.

[31] H. Uhm, J.P. Lim, and S.Z. Li, "Sterilization of bacterial endospores by an atmospheric-pressure argon plasma jet," Appl. Phys. Lett. Vol. 90, pp. 261501 (1-3), 2007.

[32] M.K. Boudam, M. Moisan, B. Saoudi, C. Popovici, N. Gherardi, and F. Massines, "Bacterial spore inactivation by atmospheric-pressure plasmas in the presence or absence of UV photons as obtained with the same gas mixture," J. Phys. D: Appl. Phys. Vol. 39, pp. 3494-3507, 2006.

[33] Website: http://www.verre-et-quartz.fr. Company Type: Private. Business Started: 1947.available at: www.flashlamps-vq.com/CatalogueVQF.pdf.

[Downloaded from ijop.ir on 2026-11-23]



Farshad Sohbatzadeh was born in Khalkhal, Iran, in 1971. He received the B.Sc. degree and the M.Sc. and Ph.D. degrees in atomic and molecular physics from Shahid Beheshti University, Tehran, Iran, in 1994, 1997, and 2004, respectively He was a Visiting Scholar with the Institute of Laser Engineering, University of Osaka, Suita, Japan, from 2002 to 2003. He is currently a professor of the Faculty of Basic Sciences, University of Mazandaran, Babolsar, Iran. His current research interests include gas discharge physics and engineering, plasma applications, and measurements.



Mojgan Barzegar received her B.Sc. in nuclear physics from Guilan University, Iran, in 2012 and M.Sc. in Plasma Engineering from Mazandaran University in 2016. She received her M.Sc. degree under the supervision of Dr. Farshad Sohbatzadeh, professor at Mazandaran University, Babolsar, Iran. She worked on arc flash lamps and the effectiveness of arc lamps and physical plasma on Bacteria E.coli.



Abasalt Hosseinzadeh Colagar received the B.Sc. degree in biology from Ferdowsi University in 1997, the M.Sc. degree in cellular and molecular sciences from Razi University of Kermanshah in 2000. He received his Ph.D. degrees in cellular and molecular sciences at Razi University and the National Institute of Genetics and Biotechnology. He is currently a professor at Mazandaran University, Babolsar, Iran. His current research interests include Molecular biotechnology and Interdisciplinary Science.

[Downloaded from ijop.ir on 2026-11-23]