Tip sensor probe for changing refractive index measurement in small volumes

H. Nikbakht [a], H. Latifi [a,b] *, T. Amini [b], and M. I. Zibaii [a]

[a] Laser and Plasma Institute, Shahid Beheshti University, Tehran, Iran
[b] Applied Physics Department, Physics Facaulty, Shahid Beheshti University, Tehran, Iran
*** E-mail: Latifi@sbu.ac.ir**

ABSTRACT— In this paper, a tapered tip optical fiber probe sensor for localized refractive index (RI) measurements is presented. This sensor's interaction with analytes is confined to a few micro-meters which makes it a promising candidate for in-vivo or even intra-cellular RI monitoring. This tapered tip was simply fabricated by etching optical fiber with hydrofluoric acid to a conic shape with a sub-micrometer aperture. The sensor was calibrated for RI measurement using different concentrations of NaCl in water. Limit of detection of $6.7\times10^{-5}\,RIU$ was achieved for this low-cost sensor.

KEYWORDS: etching, intra-cellular sensor, optical fiber tip, refractive index, tapered optical fiber.

I. INTRODUCTION

Optical fiber tip is widely being used in scanning near-field optical microscopy (SNOM) [1], light trapping applications [2], fluorescence stimulation [3] and surface plasmon resonance [4]. Its small size, special geometry and bio-compatibility of its constituent material make it an excellent candidate for biological and intra-cellular applications [3], [5], [6].

There are a great demand for refractive index (RI) measurement in very small volumes and in-vivo applications [7], [8]. RI measurement is important from two points of view. First, it is crucial for optical treatment and optical system designing. Second, it can be related to some chemical or biological properties of sample analytes. The latter can be further enhanced by utilization of some bio-recognition elements to monitor minor concentrations of some chemicals, which may be used for monitoring biological reactions in a cell and organelles behavior [9], [10].

There are many methods for RI measurements, divided into two main branches: free-space and confined optical refractometry. These methods include some old ones such as, interferometry, Brewster angle measurement, critical angle measurement, index matching [11] and some new and growing methods like, surface plasmon resonance (SPR) [12], localized surface plasmon resonance (LSPR) [13] and waveguide based techniques [14]–[17]. However, increasing sensitivity and flexibility are still serious challenges in refractometry. On the other hand, most of these methods require large amounts of sample and therefore cannot be used for small volumes or for in-vivo applications.

Herein we report a sensitive fiber tip refractometer utilizing a very simple probe which can be used for in-vivo and intracellular application. This sensor's geometry and its sub-micrometer aperture limit the interaction region to femto-liter scale volume of the analyte. Therefore it can locally detect RI and is appropriate to be integrated in lab on a chip devices. This sensor consists of a SMF-28 optical fiber which is etched using hydrofluoric acid to a conical tip. Then the sensor was calibrated with monitoring the reflected spectrum of the sensor immersed in solutions with different refractive indices.

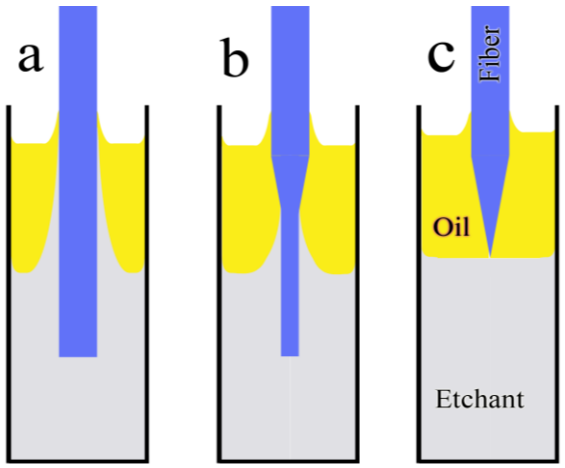

Fig. **1:** Schematic tip image at (a) the beginning, (b) during and (c) the end of etching process

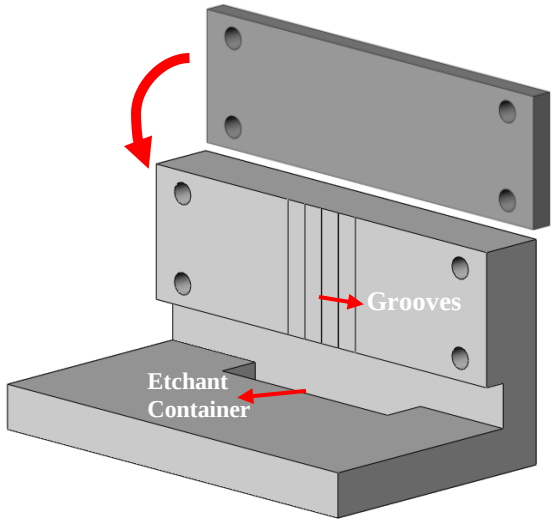

Fig. **2**: The fiber holder for etching

II. Experiment

A. *Sensor fabrication*

The fabrication method is etching cleaved fiber with a two phase liquid consisting hydrofluoric acid (HF) on bottom and a protective oil layer on top. This method which is usually used for etching optical fiber tips, utilizes meniscus forces to etch the fiber to a conic shape [18]. Capillary forces lift the etchant-oil interface so that it rises in the vicinity of fiber, hence more surface of the fiber is exposed to the acid. (Fig. 1-a). Because the capillary force is inversely proportional to fiber's radius, as the acid etches the fiber the radius decreases that brings down etchant-oil interface level. Therefore some area of the fiber is no longer exposed to the acid and its diameter remain constant while the acid is etching other areas below the interface (Fig. 1-b). As the etching proceeds fiber's radius decreases to zero and the etchant oil interface becomes flat (Fig. 1-c).

Temperature, concentration and composition of the etchant, angle of the fiber relative to vertical axis and protective oil layer are important parameters which influence the final angle, aperture and smoothness of the tip [19]. To make this method repeatable, temperature during the etching process was held constant and the fiber was vertically fixed with a poly(methyl methacrylate) (PMMA) holder. The holder consists of several grooves to hold the fibers and a container for the etchant and oil. All parts of the holder were fixed with screws (Fig. 2).

A SMF-28 fiber was stripped, cleaned with 2-propanol, cleaved and then fixed on the holder. After that, the container was filled with 1.5 mL HF 40% (v/v) and 0.5 mL of Silicon oil on top of the acid. Then, the fiber was immersed in this two phase liquid. During the process reflection spectrum of the sensor was monitored. After 60 minutes, when etching was finished, the fiber was removed and washed successively with 0.1 M NaOH solution to neutralize the remaining acid, then with deionized water and acetone.

B. *RI measurement*

After preparation of the sensor, it was placed in a setup to measure its reflection spectrum (Fig. 3). Light emitted from a super luminescence diode (SLD) is passed through a circulator to the sensor. A part of incident light reflects to the circulator and goes to an optical spectrum analyzer (OSA). Finally the OSA measures the reflection spectrum which contains information from the external medium in the interaction zone. Analyzing this spectrum makes it possible to monitor the

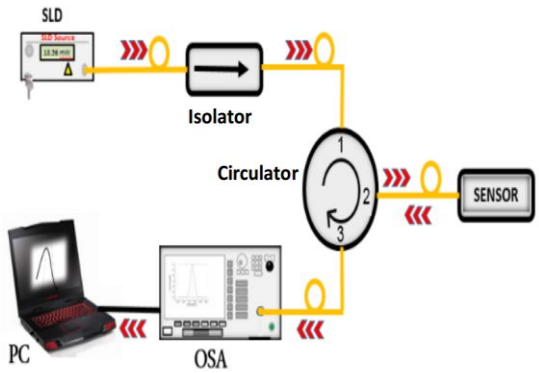

Fig. **3**: Schematic experimental setup

RI of the analyte. To calibrate the sensor it was tested with different concentrations of NaCl as standard solutions with known RI (

Table **1**). This test was repeated 5 times at room temperature to ensure the repeatability of the experiment.

Ray optics simulation was also done with ZEMAX to determine the interaction area of the sensor with surrounding medium.

Table **1**: RI of different concentrations of NaCl

Concentration (% w/w)	Refractive index
0	1.3330
0.1	1.3332
0.3	1.3335
0.4	1.3337
0.7	1.3342

III. RESULTS AND CONCLUSION

Fig. 4 shows scanning electron microscope (SEM) images of the sensor which proves the formation of the tip with a cone angle of 30º and sub-micrometer aperture size. It can be seen from Fig. 4-a that the slope in the tapered region is constant which means that the tapering geometry is linear resulting in minimum loss in the tapered region relative to other geometries [14].

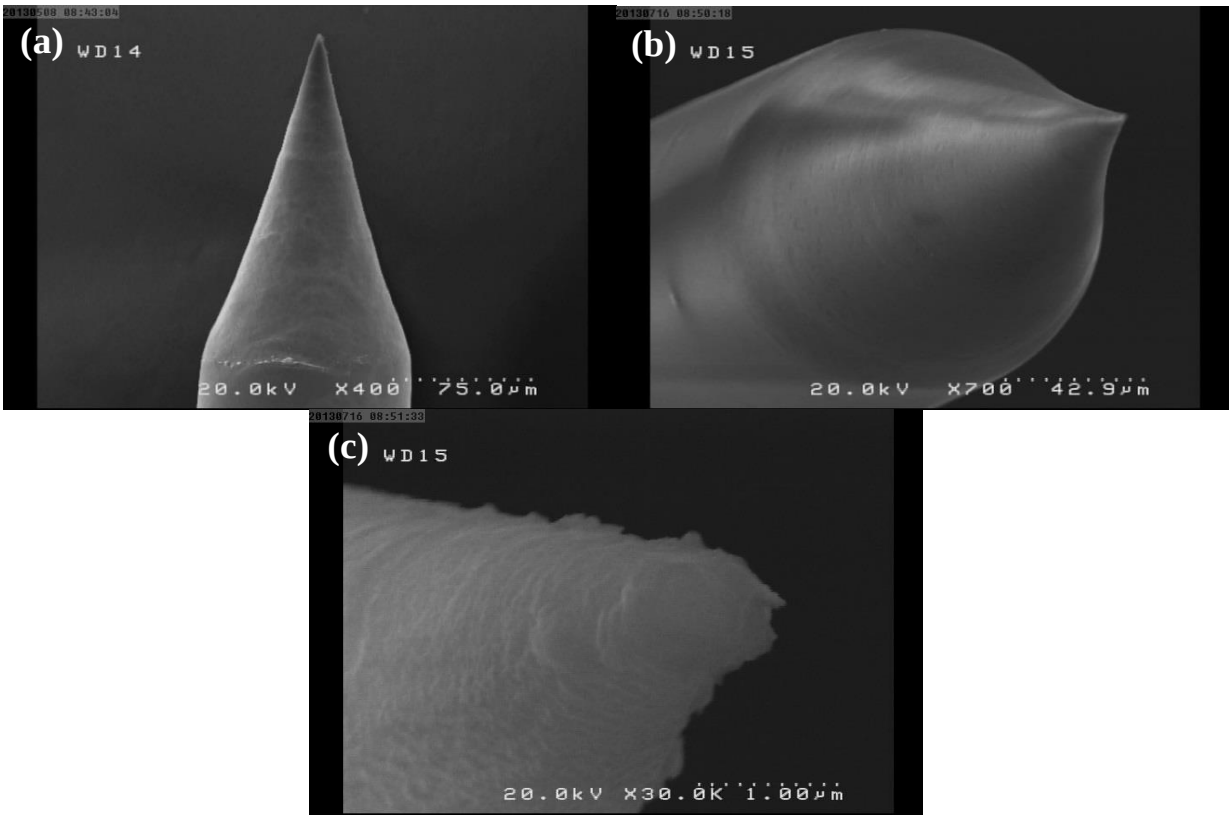

Fig. **4**: SEM images of a tapered fiber tip made by using a modified etching method. (a) side view , (b) 3D view and (c) sub-micrometer tip aperture

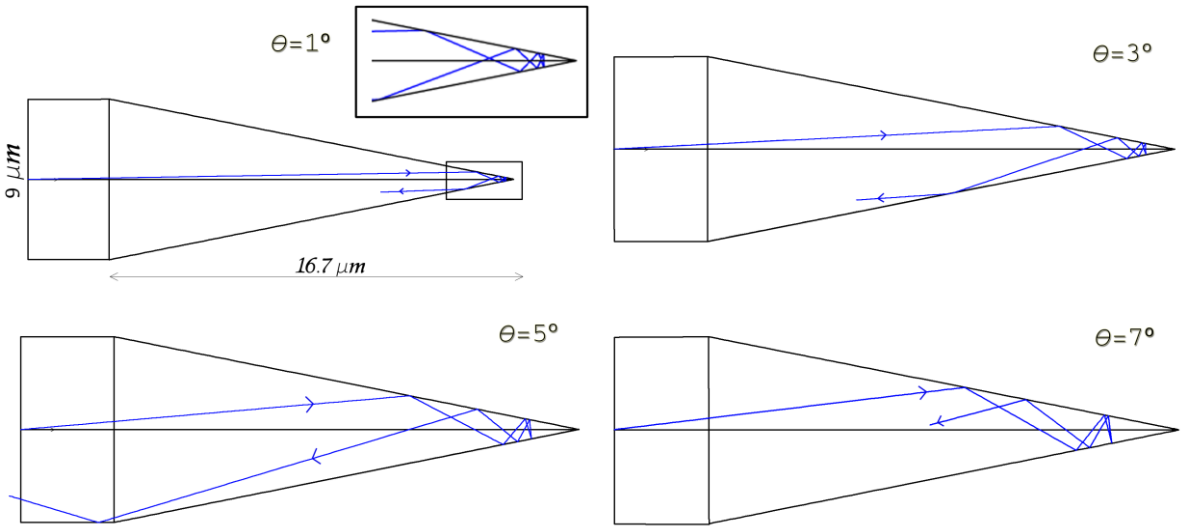

Fig. 5: Ray optic simulation of the fiber tip using ZEMAX for different incident ray angles (only core region is shown)

Ray optics simulation shows how different incidence angles lead to different path lengths which can cause interference in the reflected spectrum.

When a ray reflects from tip-analyte interface, RI of the analyte affects reflection coefficient, which is the base of RI sensing. Therefore, increasing the number of reflections increases sensitivity and the region with more reflections becomes more sensitive to the surrounding.

Angular distribution of rays in the single mode fiber is maximum at 0° and goes to zero at 7° (acceptance angle). Ray optics simulations (Fig. 5) show that most of the reflections take place in the last 2 µm of the tip. Therefore, the sensing region is confined to a µm scale zone which leads to RI measurement of femto-liter volume samples. In other words, this sensor is potentially able to measure intra-cellular parameters.

It was mentioned that tip geometry cause interference in the reflected spectrum. Fig. 6 shows this interferometric spectrum when it is embedded in solutions with different refractive indices. The spectrum shows a minimum at about 1530 nm and a maximum at about 1560 nm. The power at the maximum and minimum was plotted versus analyte RI (Fig. 7). This results show that the reflected power decreases with increasing analyte RI, which is in agreement with decreasing Fresnel's reflection coefficient when difference in refractive indices of the two medium decreases.

The power sensitivity of the sensor is calculated from [7]:

$$S_P = \frac{P_{n_2} - P_{n_1}}{n_2 - n_1} \left(\mathrm{dB}/\,RIU \right) \qquad (1)$$

Where, P_{n2} and P_{n1} are the reflected power measured in dB in solutions with n_2 and n_1 refractive indices, respectively. Power sensitivity of 1900 dB/ RIU and 2300 dB/ RIU in the reflected power was achieved

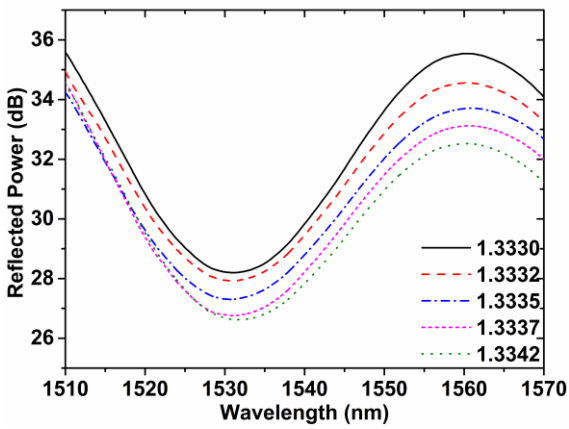

Fig. 6: Reflection spectrum of the probe in different RIs

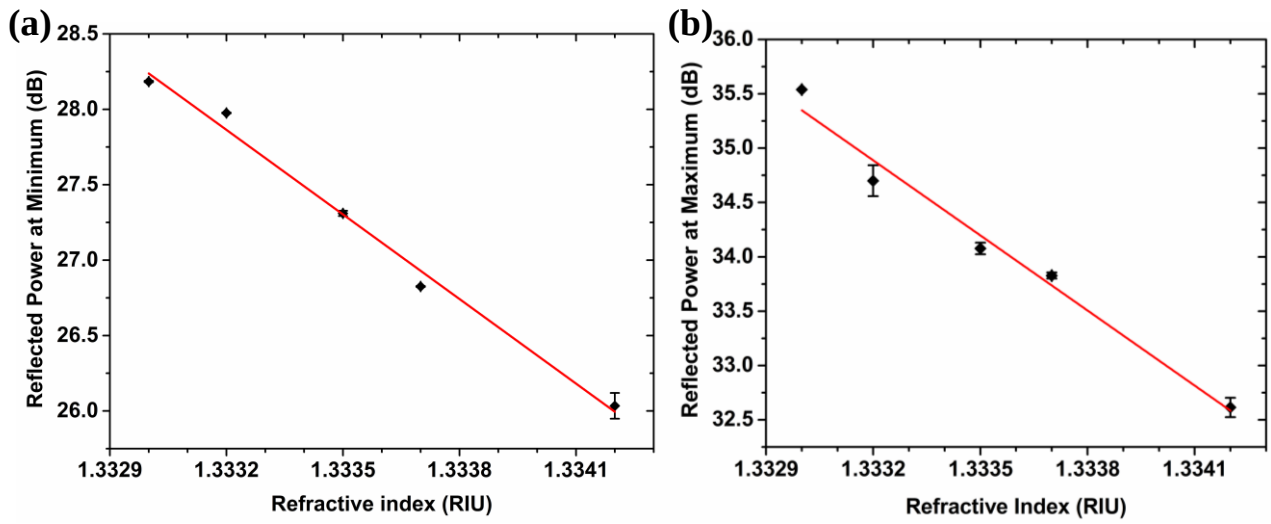

Fig. 7: Change in reflected power at minimum (a) and maximum (b) versus RI

for the minimum and the maximum of the reflected spectrum of the sensor, respectively. The maximum error after repeating experiment for 5 times was $0.127dB$ and $0.189dB$ for the minimum and maximum, respectively. These errors leads to limit of detection of $6.7\times10^{-5}RIU$ and $8.2\times10^{-5}RIU$.

IV. Conclusion

A simple and sensitive RI sub-micrometer tip sensor was presented. This sensor which monitors reflected spectrum of the tip can detect changes in RI in femto-liter scale volumes. The sensor has achieved limit of detection of $6.7\times10^{-5}RIU$ and can be used with a simple setup consisting a source, circulator and photodiode, too.

References

[1] G. Kostovski, P. R. Stoddart, and A. Mitchell, "The Optical Fiber Tip: An Inherently Light-Coupled Microscopic Platform for Micro- and Nanotechnologies.," *Adv. Mater.*, pp. 1–23, Mar. 2014.

[2] S. K. Mondal, S. S. Pal, and P. Kapur, "Optical fiber nano-tip and 3D bottle beam as non-plasmonic optical tweezers," *Opt. Express*, vol. 20, no. 15, p. 16180, Jul. 2012.

[3] T. Vo-Dinh, J. Alarie, B. Cullum, and G. Griffin, "Antibody-based nanoprobe for measurement of a fluorescent analyte in a single cell," *Nat. Biotechnol.*, vol. 18, no. 7, pp. 764–7, Jul. 2000.

[4] Y. Yuan, D. Hu, L. Hua, and M. Li, "Theoretical investigations for surface plasmon resonance based optical fiber tip sensor," *Sensors Actuators B Chem.*, vol. 188, pp. 757–760, Nov. 2013.

[5] R. Yan, J.-H. Park, Y. Choi, C.-J. Heo, S.-M. Yang, L. P. Lee, and P. Yang, "Nanowire-based single-cell endoscopy," *Nature*, vol. 7, no. 3, pp. 191–6, Mar. 2012.

[6] T. Vo-Dinh and P. Kasili, "Fiber-optic nanosensors for single-cell monitoring," *Anal. Bioanal. Chem.*, vol. 382, no. 4, pp. 918–25, Jun. 2005.

[7] Y.-H. Tai and P.-K. Wei, "Sensitive liquid refractive index sensors using tapered optical fiber tips.," *Opt. Lett.*, vol. 35, no. 7, pp. 944–6, Apr. 2010.

[8] J. Wang, "A Microfluidic Long-Period Fiber Grating Sensor Platform for Chloride Ion Concentration Measurement," *Sensors*, vol. 11, pp. 8550–8568, 2011.

[9] W. Z. Song, X. M. Zhang, a. Q. Liu, C. S. Lim, P. H. Yap, and H. M. M. Hosseini, "Refractive index measurement of single living cells using on-chip Fabry-Pérot cavity," *Appl. Phys. Lett.*, vol. 89, no. 20, p. 203901, 2006.

[10] E. Cuche, P. Marquet, and C. Depeursinge, “Cell refractive index tomography by digital holographic microscopy,” *Opt. Lett.*, vol. 31, no. 2, pp. 178–180, 2004.

[11] a J. Werner, “Methods in high precision refractometry of optical glasses,” *Appl. Opt.*, vol. 7, no. 5, pp. 837–43, May 1968.

[12] R. Verma, B. Gupta, and R. Jha, “Sensitivity enhancement of a surface plasmon resonance based biomolecules sensor using graphene and silicon layers,” *Sensors Actuators B Chem.*, vol. 160, no. 1, pp. 623–631, 2011.

[13] M. Wan, P. Luo, J. Jin, J. Xing, Z. Wang, and S. Wong, “Fabrication of localized surface plasmon resonance fiber probes using ionic self-assembled gold nanoparticles,” *Sensors*, vol. 10, pp. 6477–6487, 2010.

[14] H. Cheng, Z. Jing, P. Wei, and C. Xing, “Temperature compensation fiber-optic refractive index sensor based on single-mode fiber core-offset attenuator,” *Proc. SPIE Vol*, vol. 8421, p. 84215P–84215P–4, Oct. 2012.

[15] C.-F. Chan, C. Chen, A. Jafari, A. Laronche, D. J. Thomson, and J. Albert, “Optical fiber refractometer using narrowband cladding-mode resonance shifts.,” *Appl. Opt.*, vol. 46, no. 7, pp. 1142–9, Mar. 2007.

[16] H. Patrick, A. Kersey, and F. Bucholtz, “Analysis of the response of long period fiber gratings to external index of refraction,” *J. Light. Technol.*, vol. 16, no. 9, pp. 1606–1612, 1998.

[17] J. Chong, P. Shum, and H. Haryono, “Measurements of refractive index sensitivity using long-period grating refractometer,” *Opt. Commun.*, vol. 229, pp. 65–69, 2004.

[18] M. Tao, Y. Jin, N. Gu, and L. Huang, “A method to control the fabrication of etched optical fiber probes with nanometric tips,” *J. Opt.*, vol. 12, no. 1, p. 015503, Jan. 2010.

[19] B. A. F. Puygranier and P. Dawson, “Chemical etching of optical fibre tips-experiment and model,” *Ultramicroscopy*, vol. 85, no. February, pp. 235–248, 2000.